STB21N65M5, STF21N65M5
STI21N65M5, STP21N65M5, STW21N65M5

N-channel 650 V, 0.150 Ω, 17 A MDmesh™ V Power MOSFET
D²PAK, TO-220FP, TO-220, I²PAK, TO-247

Features

Order codes	V_{DSS} @ T_{Jmax}	$R_{DS(on)}$ max	I_D	P_W
STB21N65M5	710 V	< 0.179 Ω	17 A	125 W
STF21N65M5			17 A(1)	30 W
STI21N65M5			17 A	125 W
STP21N65M5				
STW21N65M5				

1. Limited only by maximum temperature allowed

- Worldwide best $R_{DS(on)}$ * area
- Higher V_{DSS} rating
- High dv/dt capability
- Excellent switching performance
- 100% avalanche tested

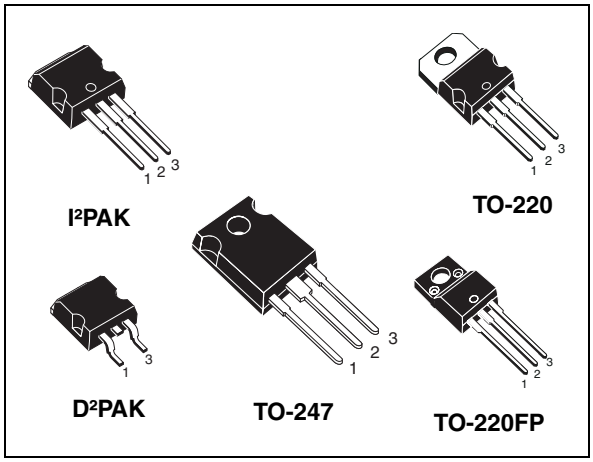

Figure 1. Internal schematic diagram

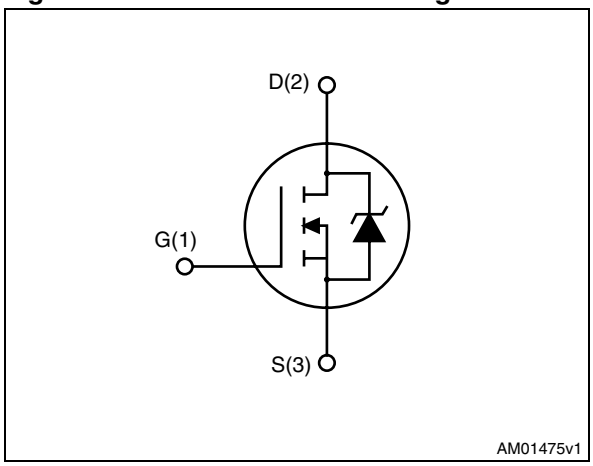

Application

Switching applications

Description

These devices are N-channel MDmesh™ V Power MOSFETs based on an innovative proprietary vertical process technology, which is combined with STMicroelectronics' well-known PowerMESH™ horizontal layout structure. The resulting product has extremely low on-resistance, which is unmatched among silicon-based Power MOSFETs, making it especially suitable for applications which require superior power density and outstanding efficiency.

Table 1. Device summary

Order codes	Marking	Package	Packaging
STB21N65M5	21N65M5	D²PAK	Tape and reel
STF21N65M5		TO-220FP	Tube
STI21N65M5		I²PAK	Tube
STP21N65M5		TO-220	Tube
STW21N65M5		TO-247	Tube

Contents

1 Electrical ratings 3

2 Electrical characteristics 4

2.1 Electrical characteristics (curves) 6

3 Test circuits 9

4 Package mechanical data 10

5 Packaging mechanical data 16

6 Revision history 17

1 Electrical ratings

Table 2. Absolute maximum ratings

Symbol	Parameter	Value		Unit
		TO-220, I²PAK, D²PAK, TO-247	TO-220FP	
V_{GS}	Gate-source voltage	± 25		V
I_D	Drain current (continuous) at T_C = 25 °C	17	17 (1)	A
I_D	Drain current (continuous) at T_C = 100 °C	10.7	10.7 (1)	A
I_{DM} (2)	Drain current (pulsed)	68	68(1)	A
P_{TOT}	Total dissipation at T_C = 25 °C	125	30	W
I_{AR}	Avalanche current, repetitive or not-repetitive (pulse width limited by T_j max)	5		A
E_{AS}	Single pulse avalanche energy (starting T_j = 25 °C, I_D = I_{AR}, V_{DD} = 50 V)	400		mJ
dv/dt (3)	Peak diode recovery voltage slope	15		V/ns
V_{ISO}	Insulation withstand voltage (RMS) from all three leads to external heat sink (t = 1 s; Tc = 25 °C)		2500	V
T_{stg}	Storage temperature	- 55 to 150		°C
T_j	Max. operating junction temperature	150		°C

1. Limited only by maximum temperature allowed.
2. Pulse width limited by safe operating area.
3. $I_{SD} \leq 17$ A, di/dt ≤ 400 A/µs; $V_{Peak} < V_{(BR)DSS}$, V_{DD} = 400 V.

Table 3. Thermal data

Symbol	Parameter	Value					Unit
		D²PAK	I²PAK	TO-220	TO-247	TO-220FP	
$R_{thj-case}$	Thermal resistance junction-case max	1				4.17	°C/W
$R_{thj-amb}$	Thermal resistance junction-ambient max		62.5		50	62.5	°C/W
$R_{thj-pcb}$	Thermal resistance junction-pcb max	30					°C/W
T_l	Maximum lead temperature for soldering purpose		300				°C

2 Electrical characteristics

(T_C = 25 °C unless otherwise specified)

Table 4. On /off states

Symbol	Parameter	Test conditions	Min.	Typ.	Max.	Unit
$V_{(BR)DSS}$	Drain-source breakdown voltage	I_D = 1 mA, V_{GS} = 0	650			V
I_{DSS}	Zero gate voltage drain current (V_{GS} = 0)	V_{DS} = Max rating V_{DS} = Max rating, T_C=125 °C			1 100	µA µA
I_{GSS}	Gate-body leakage current (V_{DS} = 0)	V_{GS} = ± 25 V			100	nA
$V_{GS(th)}$	Gate threshold voltage	V_{DS} = V_{GS}, I_D = 250 µA	3	4	5	V
$R_{DS(on)}$	Static drain-source on resistance	V_{GS} = 10 V, I_D = 8.5 A		0.150	0.179	Ω

Table 5. Dynamic

Symbol	Parameter	Test conditions	Min.	Typ.	Max.	Unit
C_{iss} C_{oss} C_{rss}	Input capacitance Output capacitance Reverse transfer capacitance	V_{DS} = 100 V, f = 1 MHz, V_{GS} = 0	-	1950 46 3	-	pF pF pF
$C_{o(tr)}$(1)	Equivalent capacitance time related	V_{DS} = 0 to 520 V, V_{GS} = 0	-	133	-	pF
$C_{o(er)}$(2)	Equivalent capacitance energy related		-	44	-	pF
R_G	Intrinsic gate resistance	f = 1 MHz open drain	-	2.5	-	Ω
Q_g Q_{gs} Q_{gd}	Total gate charge Gate-source charge Gate-drain charge	V_{DD} = 520 V, I_D = 8.5 A, V_{GS} = 10 V (see *Figure 20*)	-	50 13 23	-	nC nC nC

1. $C_{oss\ eq.}$ time related is defined as a constant equivalent capacitance giving the same charging time as C_{oss} when V_{DS} increases from 0 to 80% V_{DSS}.
2. $C_{oss\ eq.}$ energy related is defined as a constant equivalent capacitance giving the same stored energy as C_{oss} when V_{DS} increases from 0 to 80% V_{DSS}.

Table 6. Switching times

Symbol	Parameter	Test conditions	Min.	Typ.	Max	Unit
t_d (v) t_r (v) t_f (i) t_c(off)	Voltage delay time Voltage rise time Current fall time Crossing time	V_{DD} = 400 V, I_D = 11 A, R_G = 4.7 Ω, V_{GS} = 10 V (see *Figure 21*) (see *Figure 24*)	-	37 10 12 24	-	ns ns ns ns

Table 7. Source drain diode

Symbol	Parameter	Test conditions	Min.	Typ.	Max.	Unit
I_{SD} I_{SDM} (1)	Source-drain current Source-drain current (pulsed)		-		17 68	A A
V_{SD} (2)	Forward on voltage	I_{SD} = 17 A, V_{GS} = 0	-		1.5	V
t_{rr} Q_{rr} I_{RRM}	Reverse recovery time Reverse recovery charge Reverse recovery current	I_{SD} = 17 A, di/dt = 100 A/µs V_{DD} = 100 V (see *Figure 21*)	-	294 4 28		ns µC A
t_{rr} Q_{rr} I_{RRM}	Reverse recovery time Reverse recovery charge Reverse recovery current	I_{SD} = 17 A, di/dt = 100 A/µs V_{DD} = 100 V, T_j = 150 °C (see *Figure 21*)	-	340 5 29		ns µC A

1. Pulse width limited by safe operating area.
2. Pulsed: pulse duration = 300 µs, duty cycle 1.5%

2.1 Electrical characteristics (curves)

Figure 2. Safe operating area for TO-220, D²PAK, I²PAK

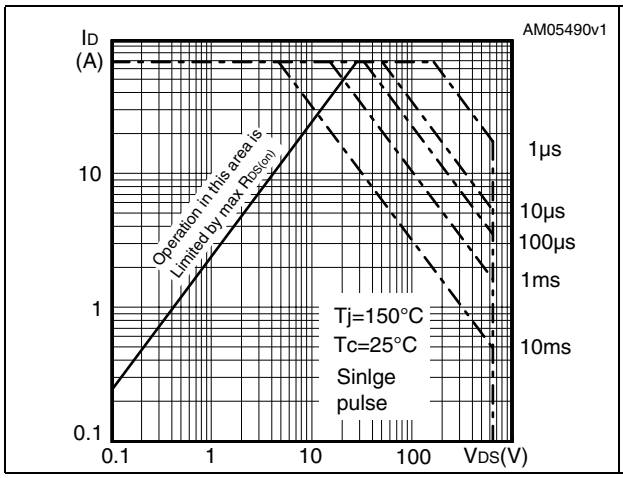

Figure 3. Thermal impedance for TO-220, D²PAK, I²PAK

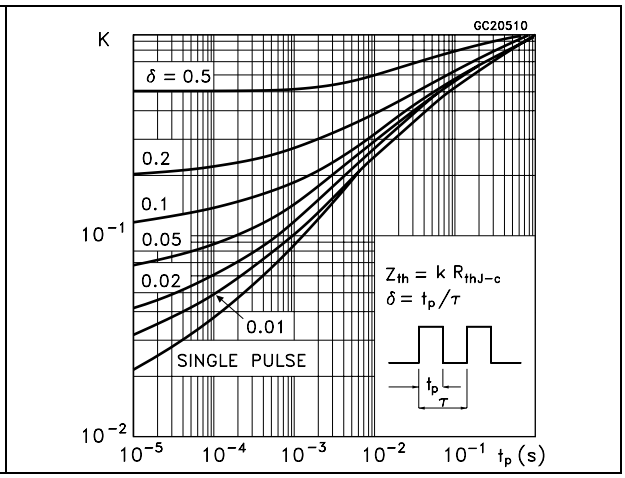

Figure 4. Safe operating area for TO-220FP

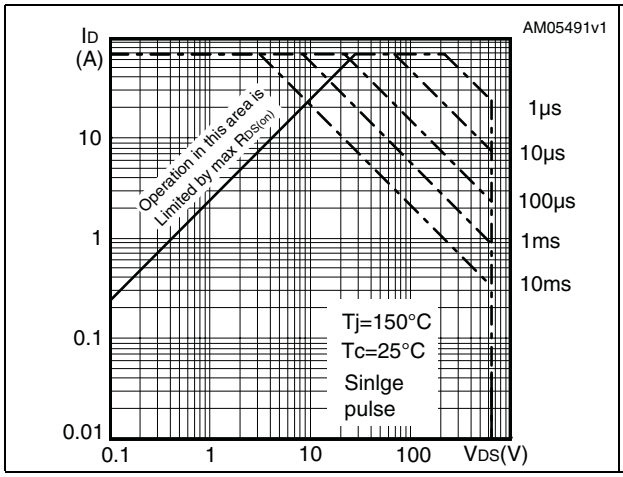

Figure 5. Thermal impedance for TO-220FP

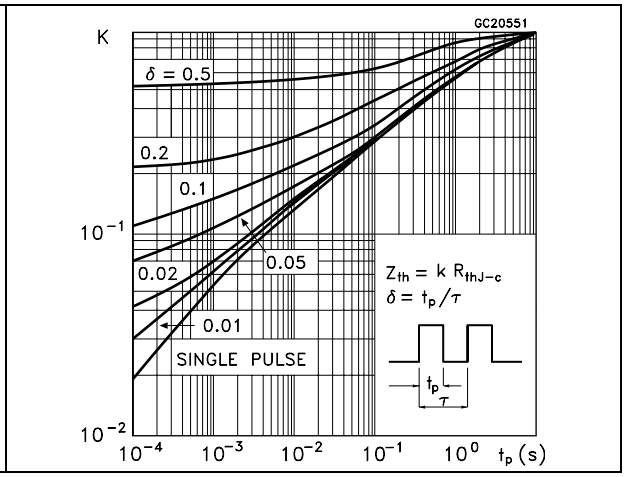

Figure 6. Safe operating area for TO-247

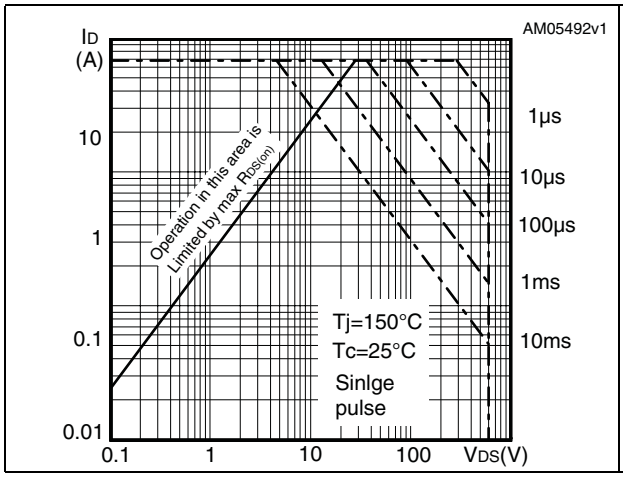

Figure 7. Thermal impedance for TO-247

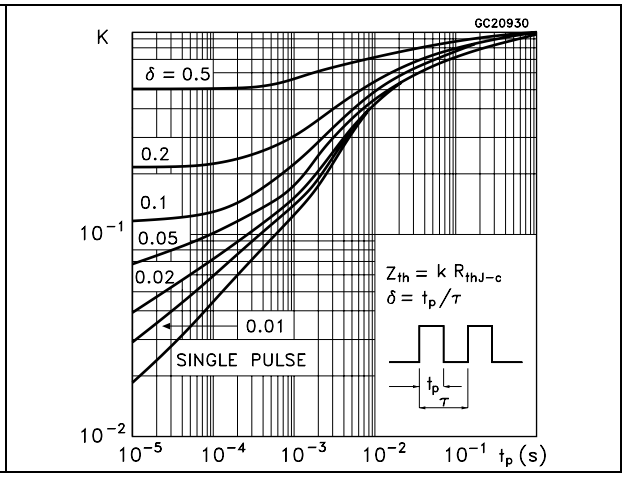

Figure 8. Output characteristics

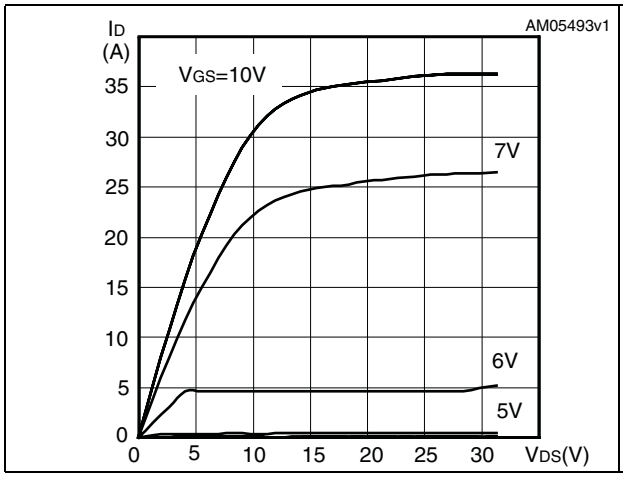

Figure 9. Transfer characteristics

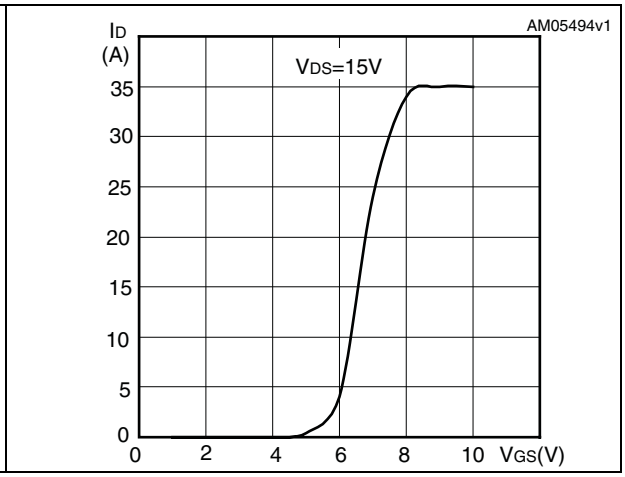

Figure 10. Gate charge vs gate-source voltage

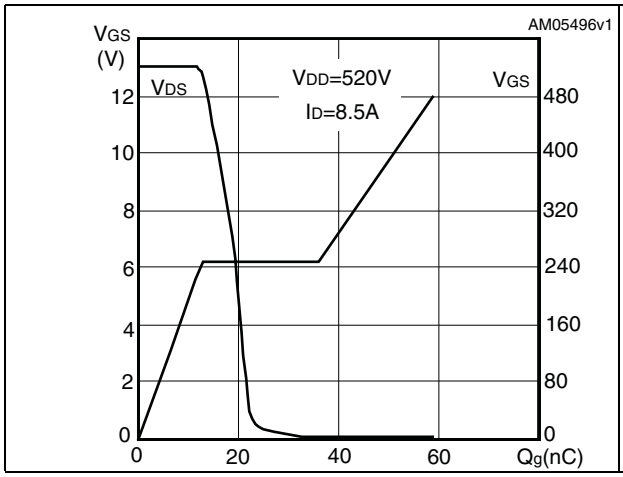

Figure 11. Static drain-source on resistance

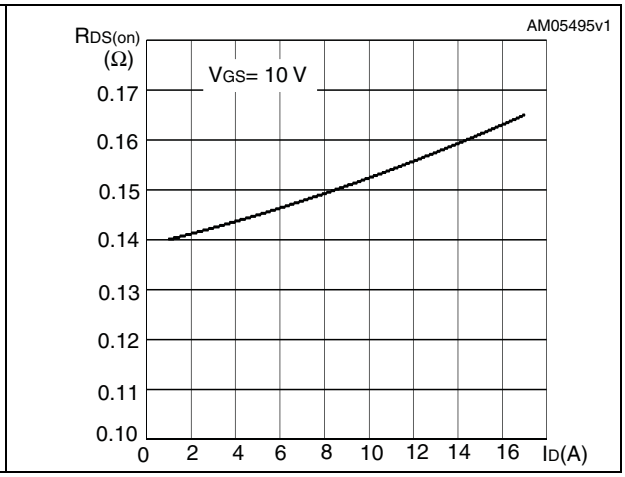

Figure 12. Capacitance variations

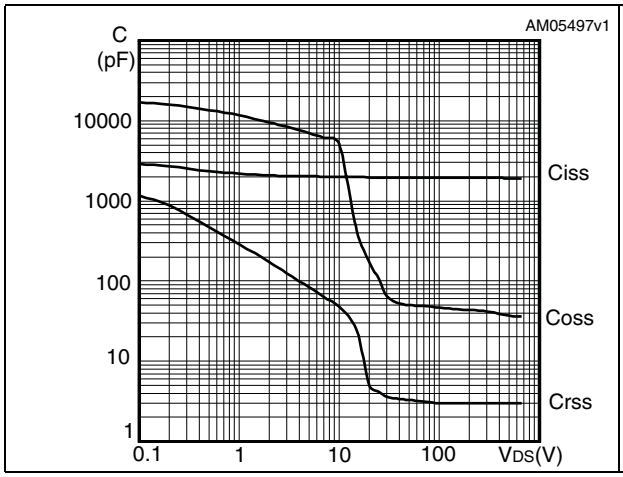

Figure 13. Output capacitance stored energy

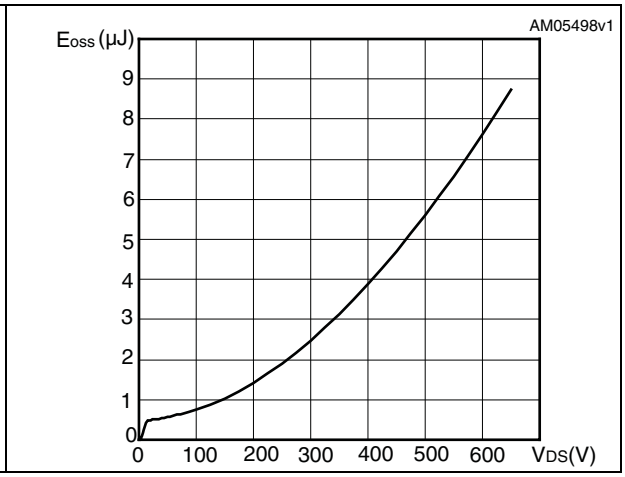

Figure 14. Normalized gate threshold voltage vs temperature

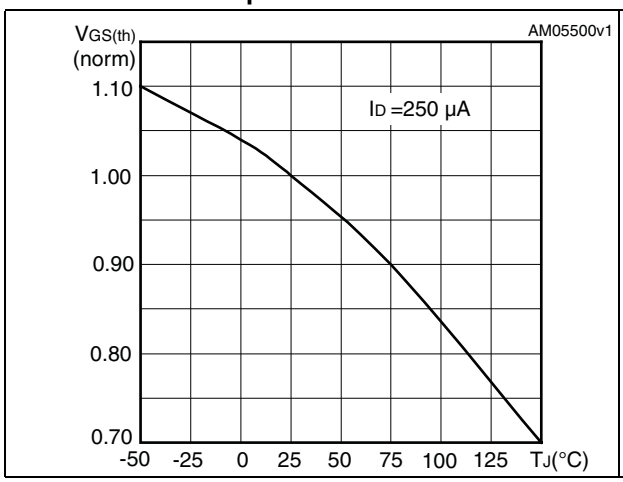

Figure 15. Normalized on resistance vs temperature

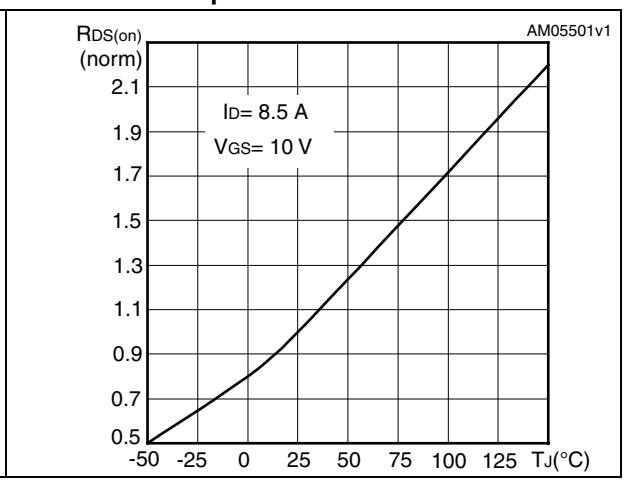

Figure 16. Source-drain diode forward characteristics

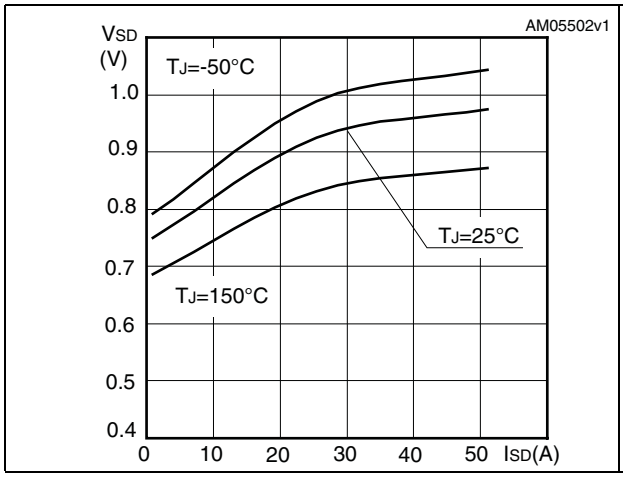

Figure 17. Normalized B_{VDSS} vs temperature

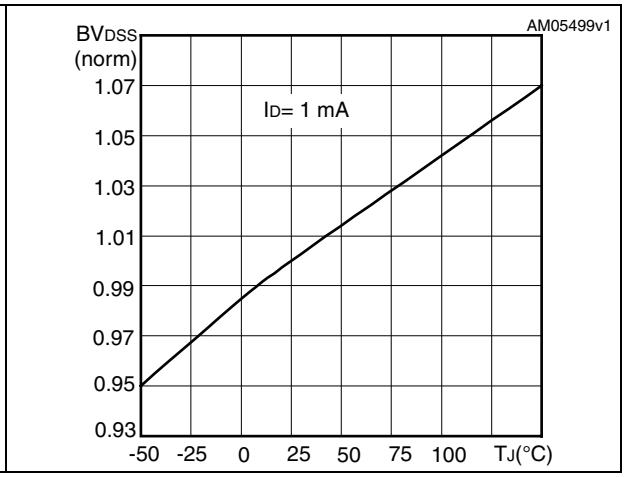

Figure 18. Switching losses vs gate resistance (1)

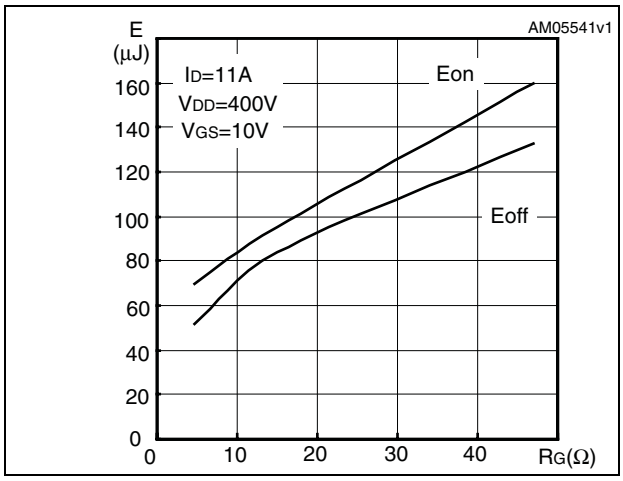

1. Eon including reverse recovery of a SiC diode.

3 Test circuits

Figure 19. Switching times test circuit for resistive load

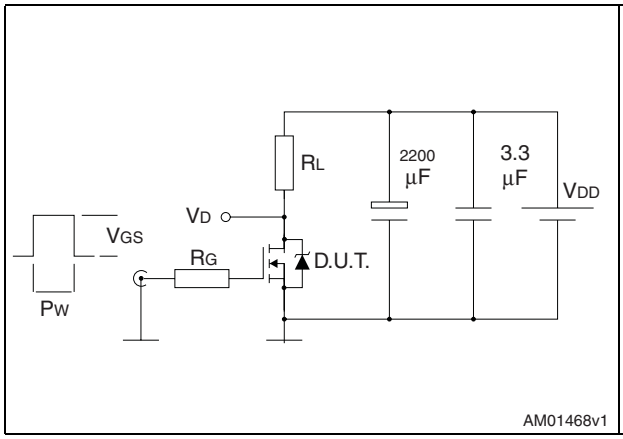

Figure 20. Gate charge test circuit

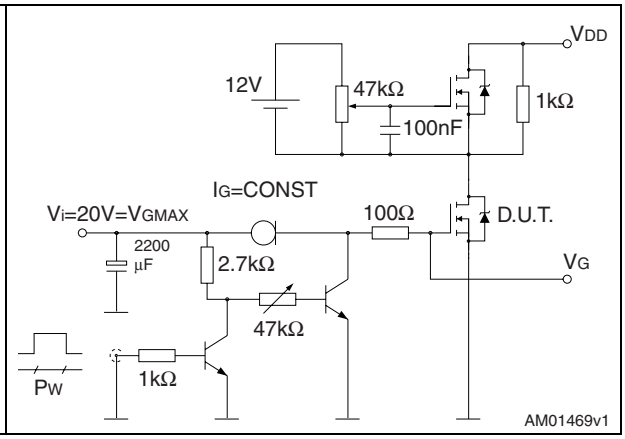

Figure 21. Test circuit for inductive load switching and diode recovery times

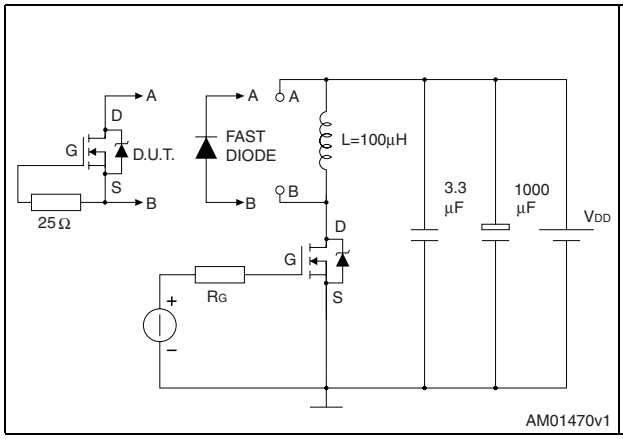

Figure 22. Unclamped inductive load test circuit

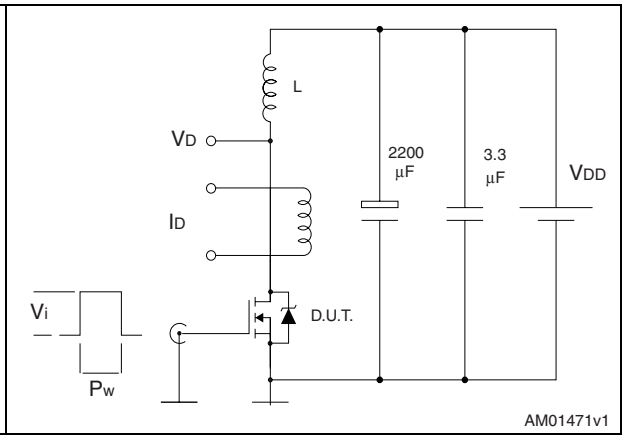

Figure 23. Unclamped inductive waveform

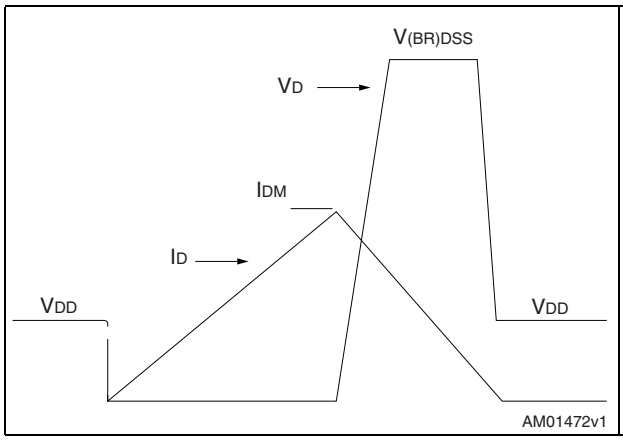

Figure 24. Switching time waveform

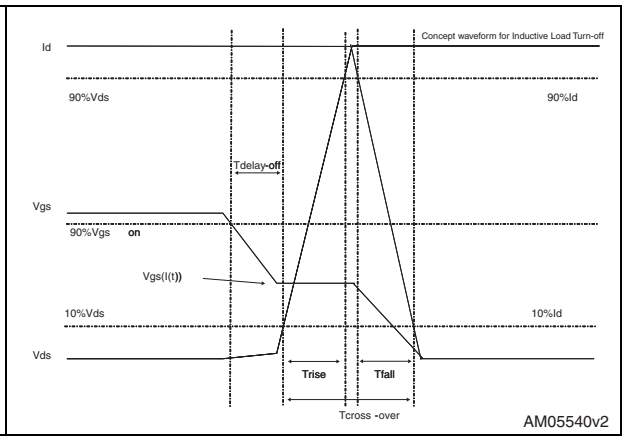

4 Package mechanical data

In order to meet environmental requirements, ST offers these devices in different grades of ECOPACK® packages, depending on their level of environmental compliance. ECOPACK® specifications, grade definitions and product status are available at: www.st.com. ECOPACK is an ST trademark.

Table 8. TO-220FP mechanical data

Dim.	mm		
	Min.	Typ.	Max.
A	4.4		4.6
B	2.5		2.7
D	2.5		2.75
E	0.45		0.7
F	0.75		1
F1	1.15		1.70
F2	1.15		1.70
G	4.95		5.2
G1	2.4		2.7
H	10		10.4
L2		16	
L3	28.6		30.6
L4	9.8		10.6
L5	2.9		3.6
L6	15.9		16.4
L7	9		9.3
Dia	3		3.2

Figure 25. TO-220FP drawing mechanical data

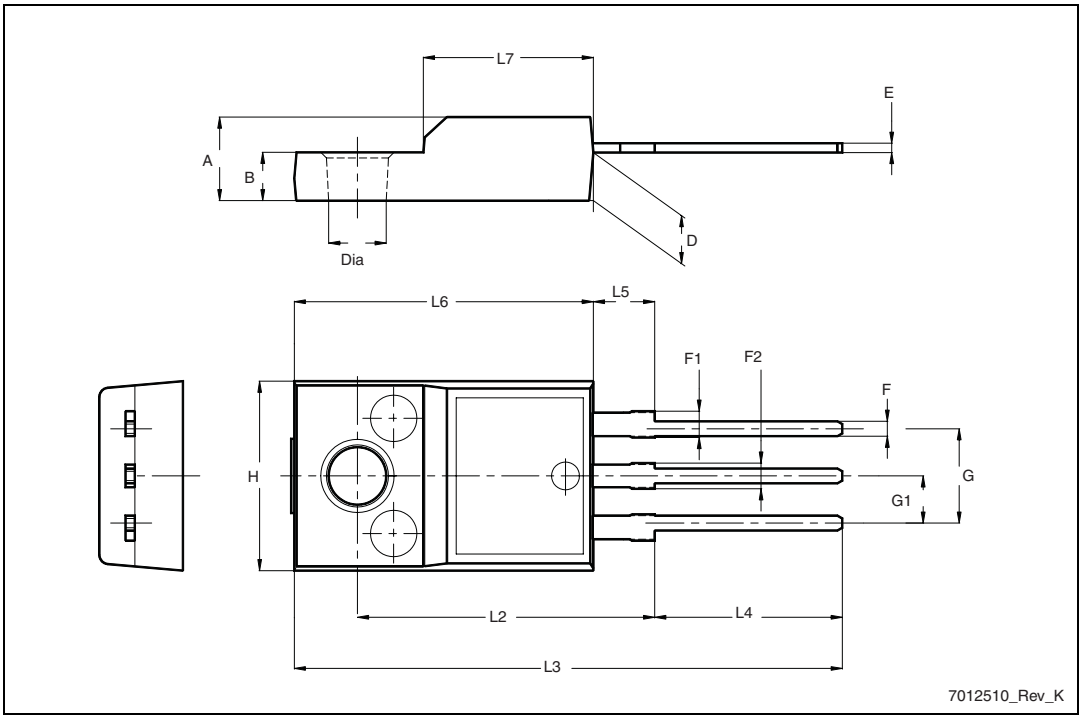

Table 9. I²PAK (TO-262) mechanical data

DIM.	mm.		
	min.	typ	max.
A	4.40		4.60
A1	2.40		2.72
b	0.61		0.88
b1	1.14		1.70
c	0.49		0.70
c2	1.23		1.32
D	8.95		9.35
e	2.40		2.70
e1	4.95		5.15
E	10		10.40
L	13		14
L1	3.50		3.93
L2	1.27		1.40

Figure 26. I²PAK (TO-262) drawing

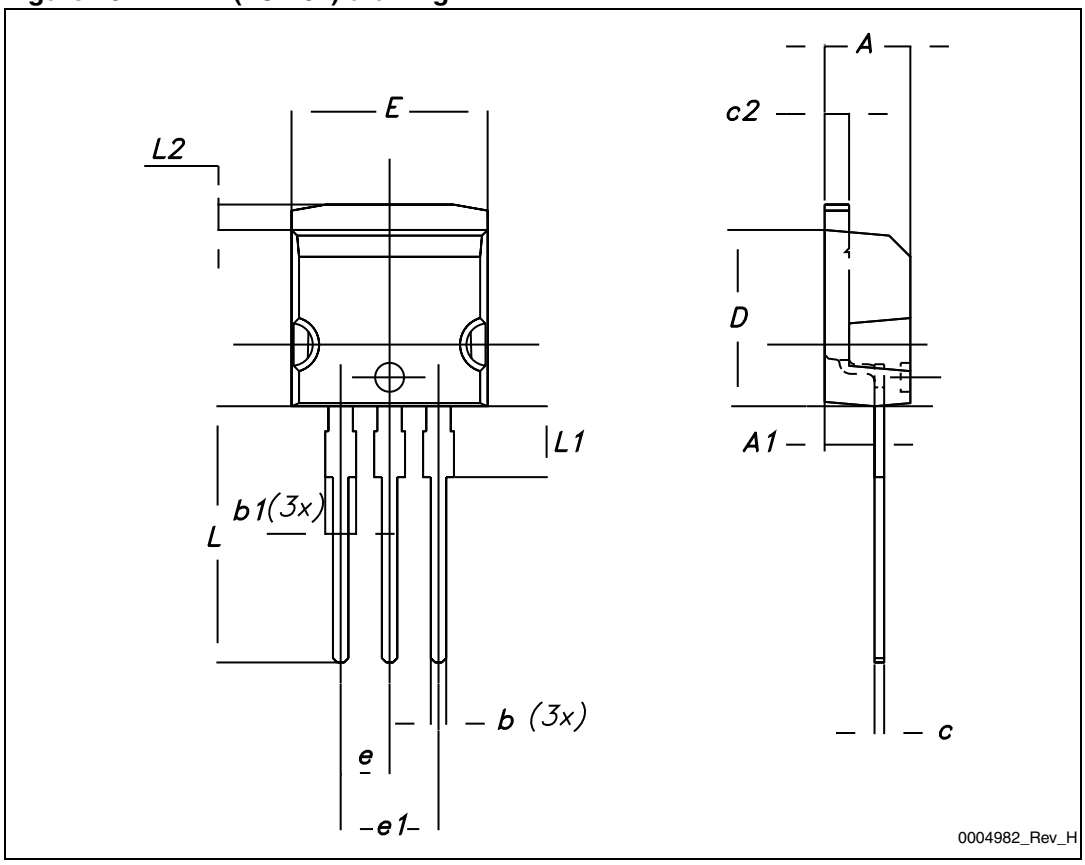

Table 10. TO-220 type A mechanical data

Dim.	mm		
	Min.	Typ.	Max.
A	4.40		4.60
b	0.61		0.88
b1	1.14		1.70
c	0.48		0.70
D	15.25		15.75
D1		1.27	
E	10		10.40
e	2.40		2.70
e1	4.95		5.15
F	1.23		1.32
H1	6.20		6.60
J1	2.40		2.72
L	13		14
L1	3.50		3.93
L20		16.40	
L30		28.90	
∅P	3.75		3.85
Q	2.65		2.95

Figure 27. TO-220 type A drawing

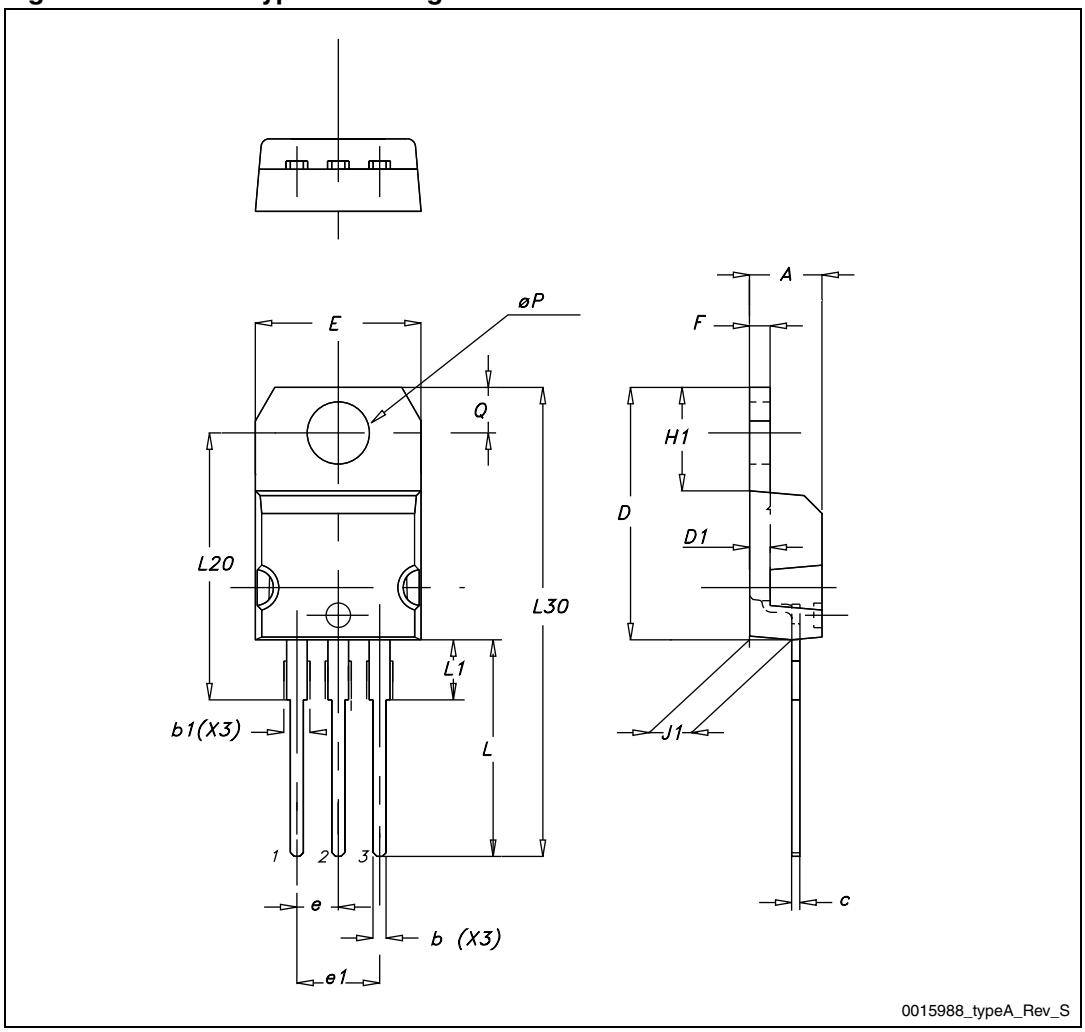

Table 11. TO-247 mechanical data

Dim.	mm		
	Min.	Typ.	Max.
A	4.85		5.15
A1	2.20		2.60
b	1.0		1.40
b1	2.0		2.40
b2	3.0		3.40
c	0.40		0.80
D	19.85		20.15
E	15.45		15.75
e		5.45	
L	14.20		14.80
L1	3.70		4.30
L2		18.50	
∅P	3.55		3.65
∅R	4.50		5.50
S		5.50	

Figure 28. TO-247 drawing

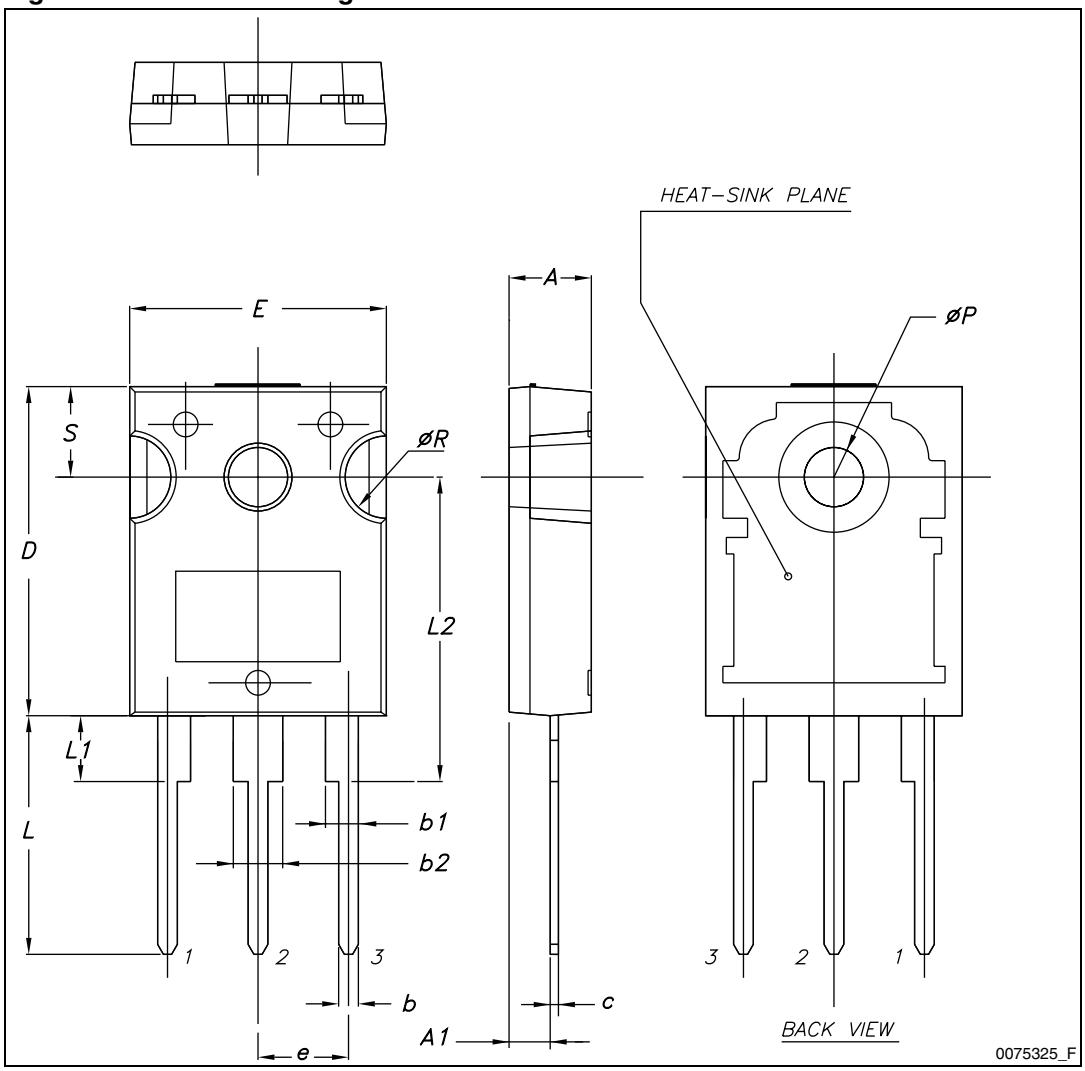

Table 12. D²PAK (TO-263) mechanical data

Dim.	mm		
	Min.	Typ.	Max.
A	4.40		4.60
A1	0.03		0.23
b	0.70		0.93
b2	1.14		1.70
c	0.45		0.60
c2	1.23		1.36
D	8.95		9.35
D1	7.50		
E	10		10.40
E1	8.50		
e		2.54	
e1	4.88		5.28
H	15		15.85
J1	2.49		2.69
L	2.29		2.79
L1	1.27		1.40
L2	1.30		1.75
R		0.4	
V2	0°		8°

Figure 29. D²PAK (TO-263) drawing

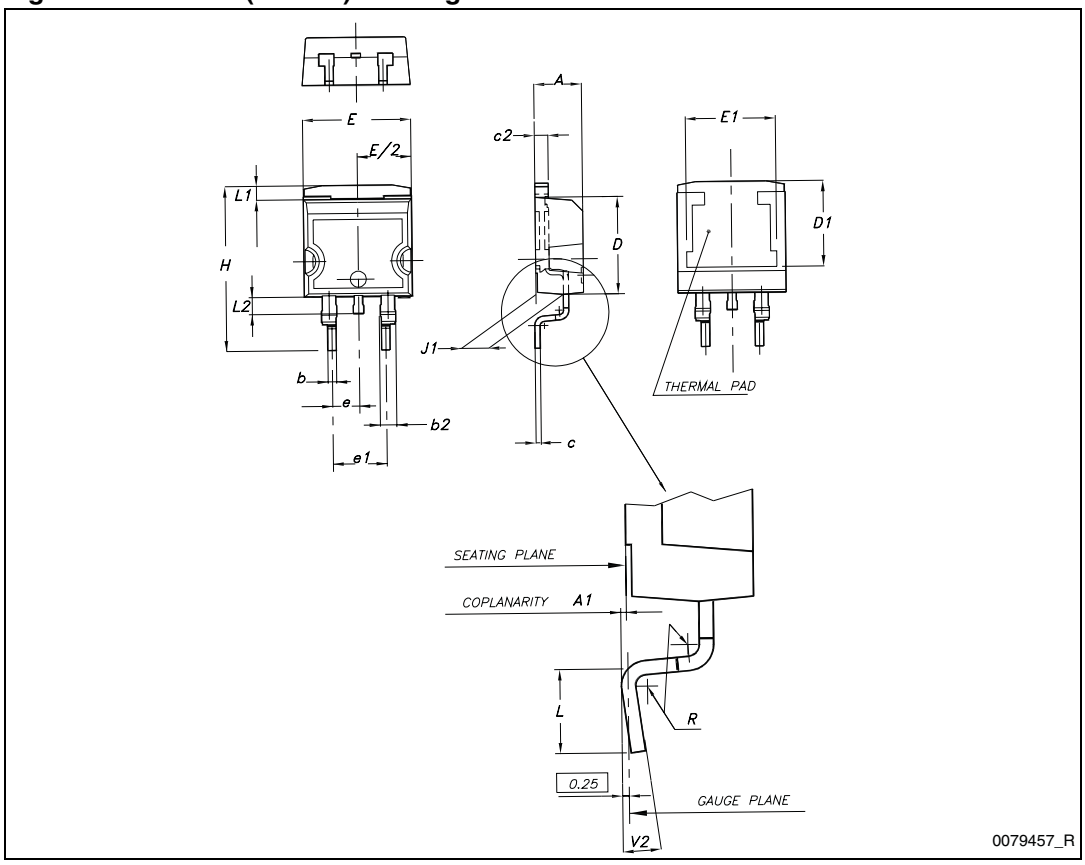

5 Packaging mechanical data

Table 13. D²PAK (TO-263) tape and reel mechanical data

Tape			Reel		
Dim.	mm		Dim.	mm	
	Min.	Max.		Min.	Max.
A0	10.5	10.7	A		330
B0	15.7	15.9	B	1.5	
D	1.5	1.6	C	12.8	13.2
D1	1.59	1.61	D	20.2	
E	1.65	1.85	G	24.4	26.4
F	11.4	11.6	N	100	
K0	4.8	5.0	T		30.4
P0	3.9	4.1			
P1	11.9	12.1	Base qty		1000
P2	1.9	2.1	Bulk qty		1000
R	50				
T	0.25	0.35			
W	23.7	24.3			

Figure 30. D²PAK footprint[a]

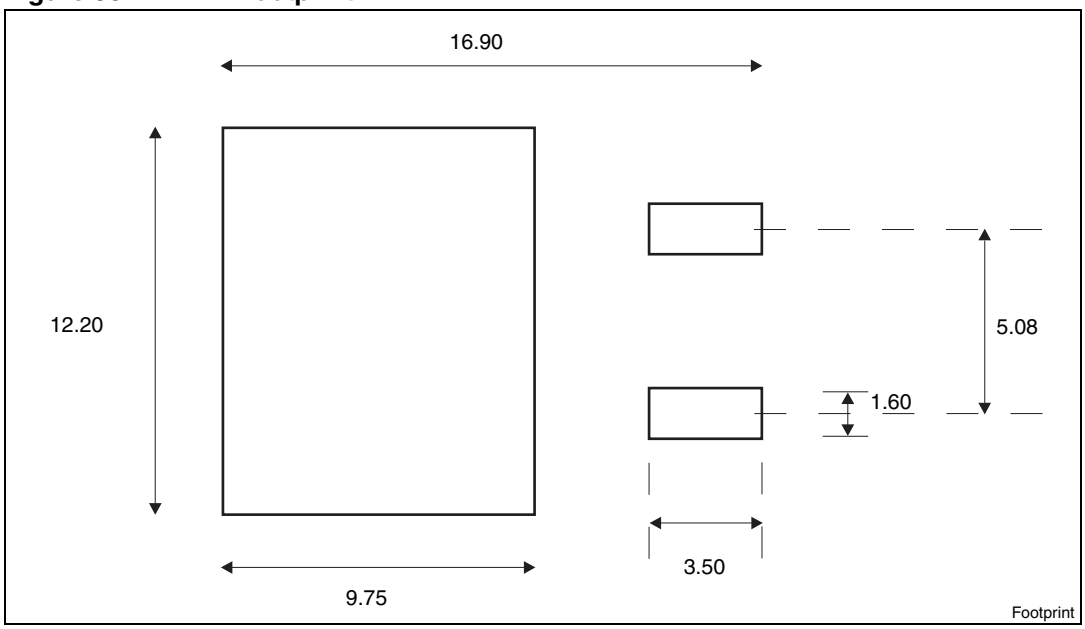

a. All dimension are in millimeters

Figure 31. Tape

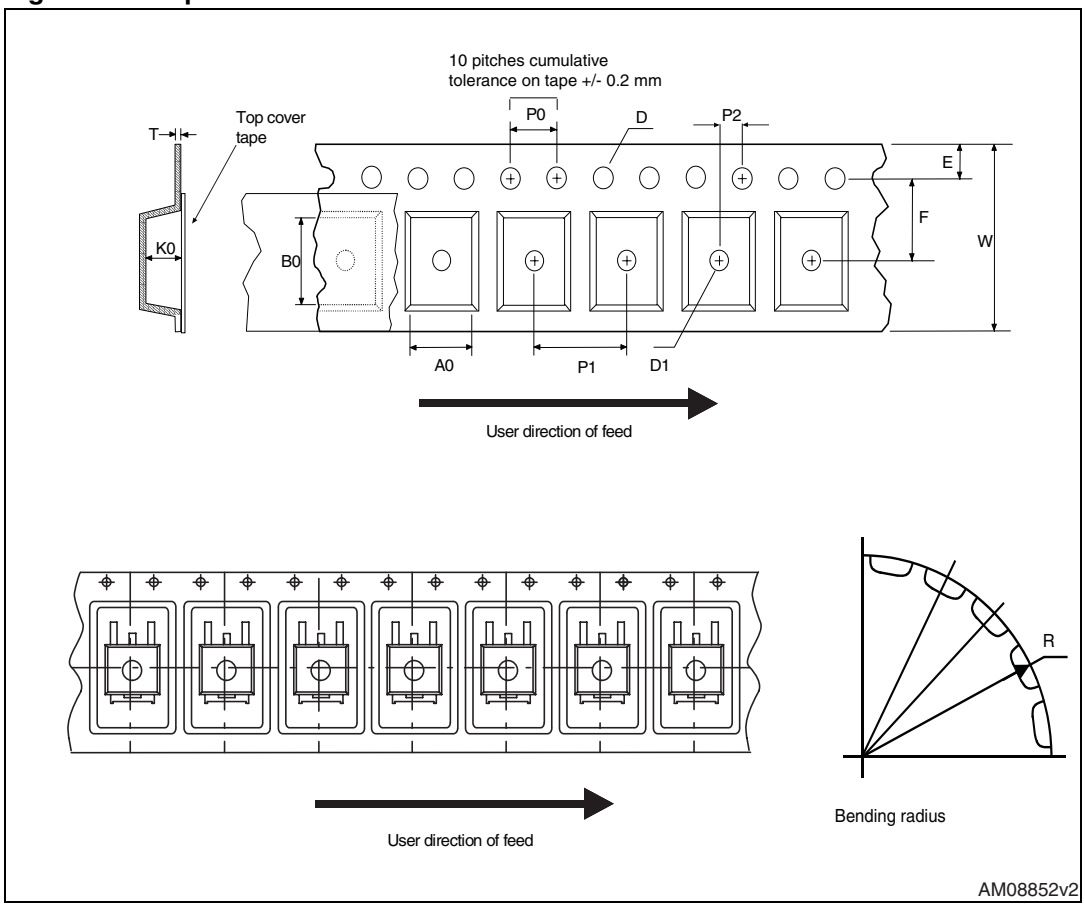

Figure 32. Reel

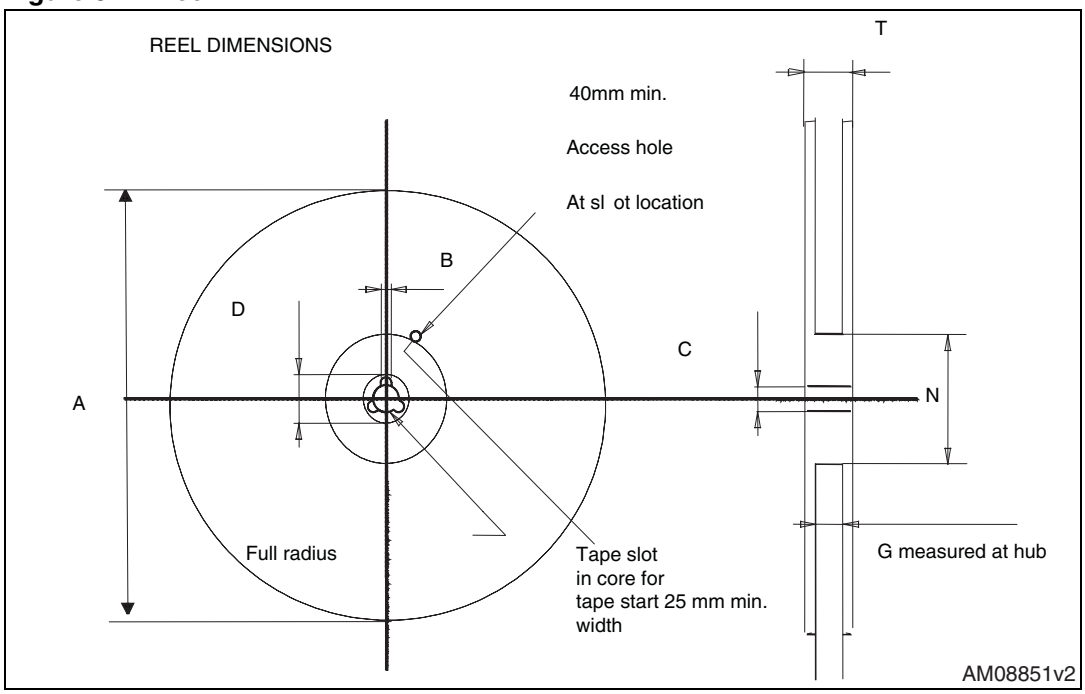

6 Revision history

Table 14. Document revision history

Date	Revision	Changes
24-Feb-2009	1	First release
27-Feb-2009	2	Corrected package information on first page.
11-Nov-2009	3	Document status promoted from preliminary data to datasheet.
11-May-2011	4	$R_{DS(on)}$ values have been updated (see *Table 4: On /off states* and *Figure 11: Static drain-source on resistance*).

Please Read Carefully:

Information in this document is provided solely in connection with ST products. STMicroelectronics NV and its subsidiaries (“ST”) reserve the right to make changes, corrections, modifications or improvements, to this document, and the products and services described herein at any time, without notice.

All ST products are sold pursuant to ST’s terms and conditions of sale.

Purchasers are solely responsible for the choice, selection and use of the ST products and services described herein, and ST assumes no liability whatsoever relating to the choice, selection or use of the ST products and services described herein.

No license, express or implied, by estoppel or otherwise, to any intellectual property rights is granted under this document. If any part of this document refers to any third party products or services it shall not be deemed a license grant by ST for the use of such third party products or services, or any intellectual property contained therein or considered as a warranty covering the use in any manner whatsoever of such third party products or services or any intellectual property contained therein.

UNLESS OTHERWISE SET FORTH IN ST’S TERMS AND CONDITIONS OF SALE ST DISCLAIMS ANY EXPRESS OR IMPLIED WARRANTY WITH RESPECT TO THE USE AND/OR SALE OF ST PRODUCTS INCLUDING WITHOUT LIMITATION IMPLIED WARRANTIES OF MERCHANTABILITY, FITNESS FOR A PARTICULAR PURPOSE (AND THEIR EQUIVALENTS UNDER THE LAWS OF ANY JURISDICTION), OR INFRINGEMENT OF ANY PATENT, COPYRIGHT OR OTHER INTELLECTUAL PROPERTY RIGHT.

UNLESS EXPRESSLY APPROVED IN WRITING BY AN AUTHORIZED ST REPRESENTATIVE, ST PRODUCTS ARE NOT RECOMMENDED, AUTHORIZED OR WARRANTED FOR USE IN MILITARY, AIR CRAFT, SPACE, LIFE SAVING, OR LIFE SUSTAINING APPLICATIONS, NOR IN PRODUCTS OR SYSTEMS WHERE FAILURE OR MALFUNCTION MAY RESULT IN PERSONAL INJURY, DEATH, OR SEVERE PROPERTY OR ENVIRONMENTAL DAMAGE. ST PRODUCTS WHICH ARE NOT SPECIFIED AS "AUTOMOTIVE GRADE" MAY ONLY BE USED IN AUTOMOTIVE APPLICATIONS AT USER’S OWN RISK.

Resale of ST products with provisions different from the statements and/or technical features set forth in this document shall immediately void any warranty granted by ST for the ST product or service described herein and shall not create or extend in any manner whatsoever, any liability of ST.

ST and the ST logo are trademarks or registered trademarks of ST in various countries.

Information in this document supersedes and replaces all information previously supplied.

The ST logo is a registered trademark of STMicroelectronics. All other names are the property of their respective owners.

© 2011 STMicroelectronics - All rights reserved

STMicroelectronics group of companies

Australia - Belgium - Brazil - Canada - China - Czech Republic - Finland - France - Germany - Hong Kong - India - Israel - Italy - Japan - Malaysia - Malta - Morocco - Philippines - Singapore - Spain - Sweden - Switzerland - United Kingdom - United States of America

www.st.com